OC-135 INTERIOR

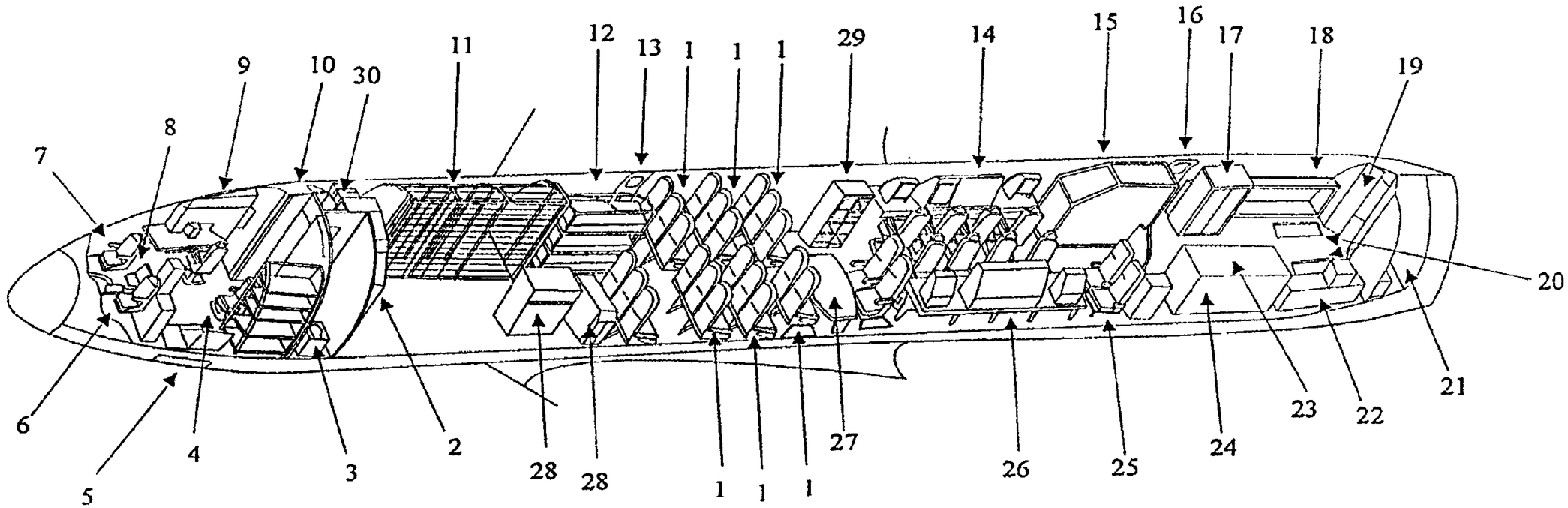

1. ADDITIONAL SEATING (6 PLACES)
2. GALLEY
3. FORWARD LATRINE
4. AUXILIARY CREW MEMBERS SEAT STATION
5. CREW ENTRY HATCH
6. PILOTS SEAT
7. CO PILOTS SEAT
8. CREW INSTRUCTOR SEAT
9. NAVIGATORS STATION
10. EQUIPMENT RACK
11. BAGGAGE COMPARTMENT
12. SLEEPING BERTHS
13. RIGHT OVERWING HATCH
14. SENSOR OPERATORS
15. FILM STORAGE RACK
16. AFT ESCAPE HATCH
17. SENSOR MAINTENANCE CABINET
18. GASEOUS OXYGEN RACK
19. EQUIPMENT LOCKER
20. AFT SENSOR BAY
21. AFT LATRINE
22. SPARE CAMERA RACK
23. MEDIA WORK STATION
24. AIRCRAFT POWER UNIT
25. SENSOR MAINTENANCE SEATS
26. FLIGHT REPRESENTATIVE/ FLIGHT MONITOR STATION
27. MISSION COMMANDER/ SENIOR FLIGHT MONITOR TABLE
28. AIRCRAFT MAINTENANCE CABINET
29. DARMS EQUIPMENT RACK
30. SAR EQUIPMENT RACK

SAR REMOVED

FIGURE 1