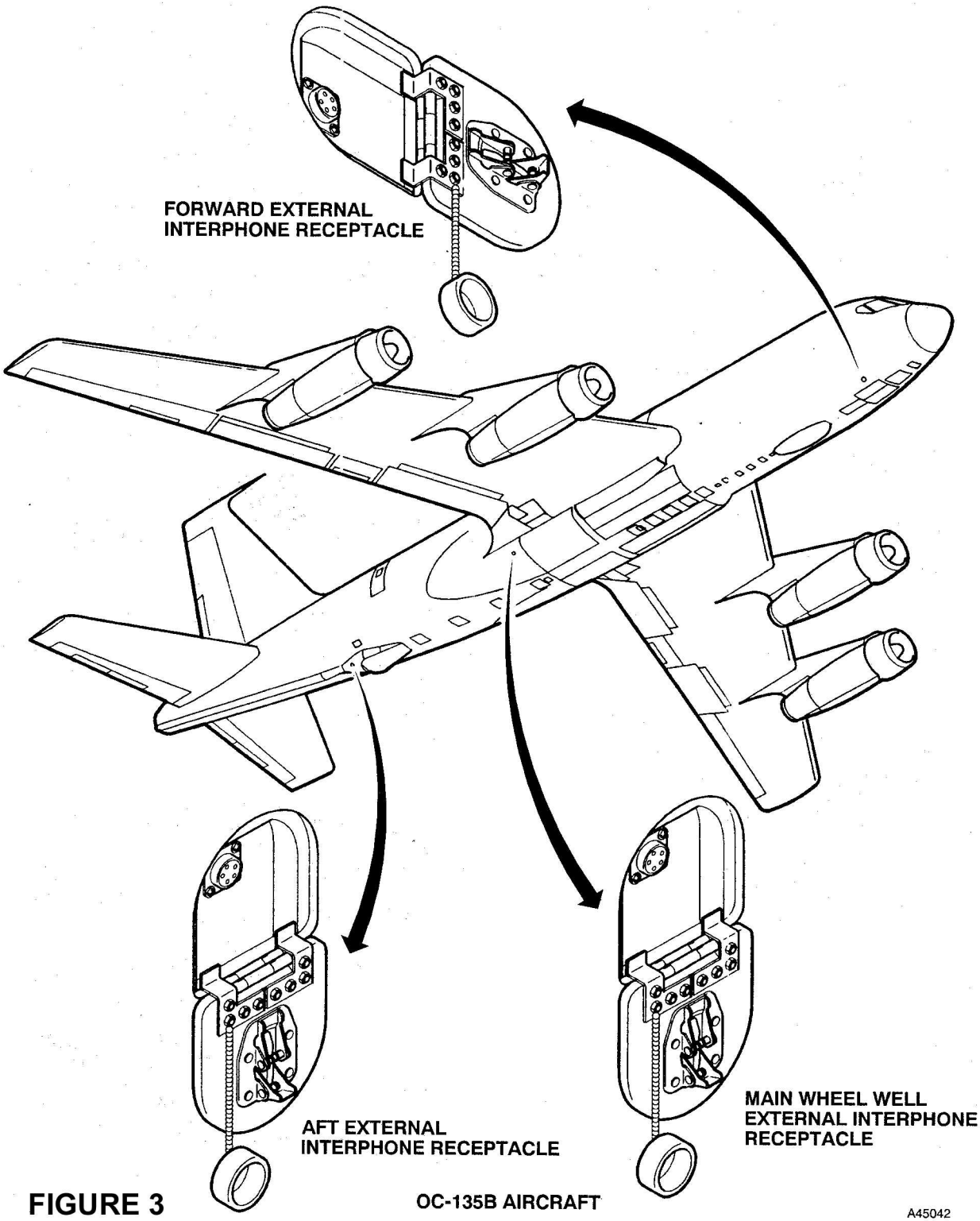
FORWARD EXTERNAL
INTERPHONE RECEPTACLE
AFT EXTERNAL
INTERPHONE RECEPTACLE
MAIN WHEEL WELL
EXTERNAL INTERPHONE
RECEPTACLE
OC-135B AIRCRAFT
A45042

FIGURE 3