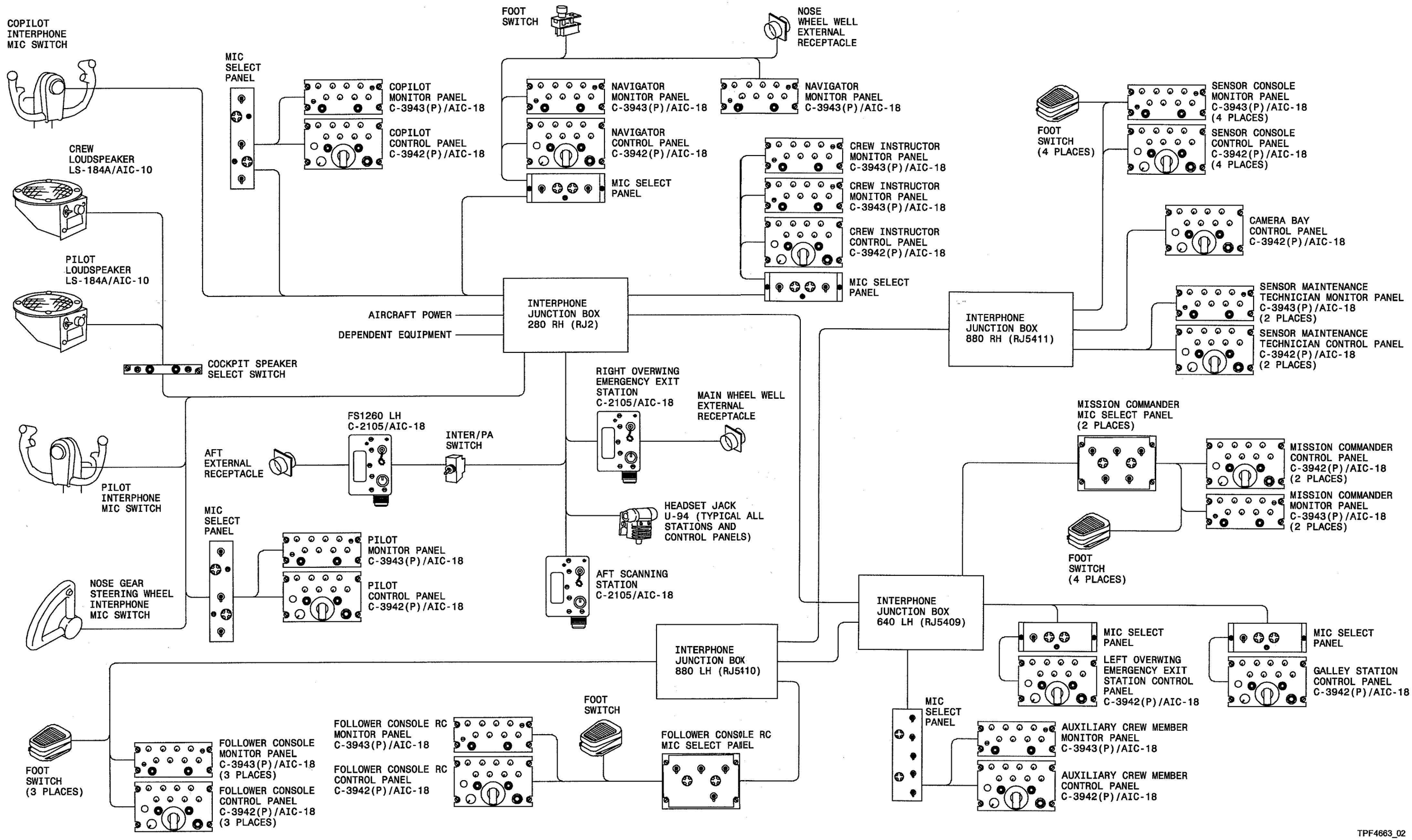
COPILOT INTERPHONE MIC SWITCH
MIC SELECT PANEL
COPILOT MONITOR PANEL C-3943(P)/AIC-18
COPILOT CONTROL PANEL C-3942(P)/AIC-18
FOOT SWITCH
NOSE WHEEL WELL EXTERNAL RECEPTACLE
NAVIGATOR MONITOR PANEL C-3943(P)/AIC-18
NAVIGATOR CONTROL PANEL C-3942(P)/AIC-18
MIC SELECT PANEL
NAVIGATOR MONITOR PANEL C-3943(P)/AIC-18
CREW LOUDSPEAKER LS-184A/AIC-10
PILOT LOUDSPEAKER LS-184A/AIC-10
CREW INSTRUCTOR MONITOR PANEL C-3943(P)/AIC-18
CREW INSTRUCTOR MONITOR PANEL C-3943(P)/AIC-18
CREW INSTRUCTOR CONTROL PANEL C-3942(P)/AIC-18
MIC SELECT PANEL
INTERPHONE JUNCTION BOX 280 RH (RJ2)
AIRCRAFT POWER
DEPENDENT EQUIPMENT
COCKPIT SPEAKER SELECT SWITCH
FOOT SWITCH (4 PLACES)
SENSOR CONSOLE MONITOR PANEL C-3943(P)/AIC-18 (4 PLACES)
SENSOR CONSOLE CONTROL PANEL C-3942(P)/AIC-18 (4 PLACES)
CAMERA BAY CONTROL PANEL C-3942(P)/AIC-18
INTERPHONE JUNCTION BOX 880 RH (RJ5411)
SENSOR MAINTENANCE TECHNICIAN MONITOR PANEL C-3943(P)/AIC-18 (2 PLACES)
SENSOR MAINTENANCE TECHNICIAN CONTROL PANEL C-3942(P)/AIC-18 (2 PLACES)
RIGHT OVERWING EMERGENCY EXIT STATION C-2105/AIC-18
MAIN WHEEL WELL EXTERNAL RECEPTACLE
FS1260 LH C-2105/AIC-18
INTER/PA SWITCH
AFT EXTERNAL RECEPTACLE
PILOT INTERPHONE MIC SWITCH
HEADSET JACK U-94 (TYPICAL ALL STATIONS AND CONTROL PANELS)
MIC SELECT PANEL
PILOT MONITOR PANEL C-3943(P)/AIC-18
PILOT CONTROL PANEL C-3942(P)/AIC-18
NOSE GEAR STEERING WHEEL INTERPHONE MIC SWITCH
AFT SCANNING STATION C-2105/AIC-18
MISSION COMMANDER MIC SELECT PANEL (2 PLACES)
MISSION COMMANDER CONTROL PANEL C-3942(P)/AIC-18 (2 PLACES)
MISSION COMMANDER MONITOR PANEL C-3943(P)/AIC-18 (2 PLACES)
FOOT SWITCH (4 PLACES)
INTERPHONE JUNCTION BOX 640 LH (RJ5409)
MIC SELECT PANEL
LEFT OVERWING EMERGENCY EXIT STATION CONTROL PANEL C-3942(P)/AIC-18
MIC SELECT PANEL
GALLEY STATION CONTROL PANEL C-3942(P)/AIC-18
INTERPHONE JUNCTION BOX 880 LH (RJ5410)
FOOT SWITCH (3 PLACES)
FOLLOWER CONSOLE MONITOR PANEL C-3943(P)/AIC-18 (3 PLACES)
FOLLOWER CONSOLE CONTROL PANEL C-3942(P)/AIC-18 (3 PLACES)
FOLLOWER CONSOLE RC MONITOR PANEL C-3943(P)/AIC-18
FOLLOWER CONSOLE RC CONTROL PANEL C-3942(P)/AIC-18
FOOT SWITCH
FOLLOWER CONSOLE RC MIC SELECT PANEL
MIC SELECT PANEL
AUXILIARY CREW MEMBER MONITOR PANEL C-3943(P)/AIC-18
AUXILIARY CREW MEMBER CONTROL PANEL C-3942(P)/AIC-18
TPF4663_02

FIGURE 4