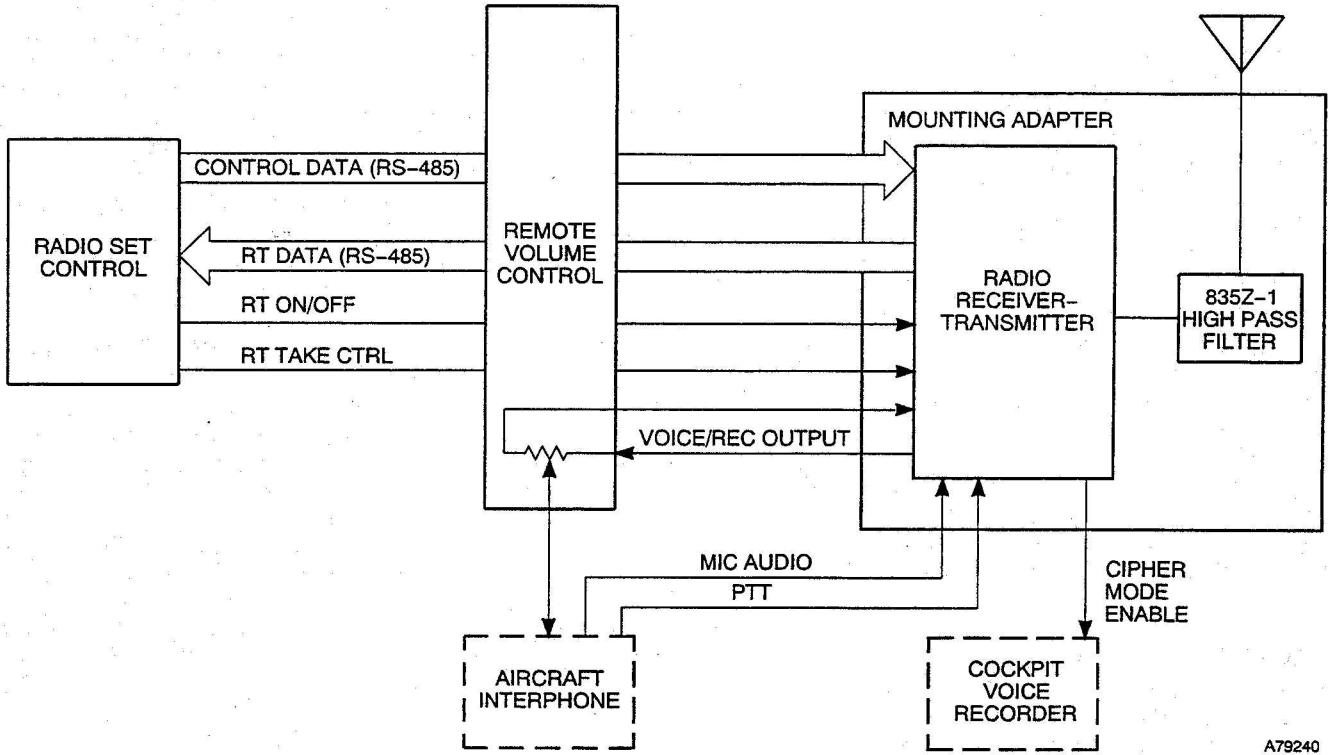
RADIO SET CONTROL
CONTROL DATA (RS-485)
RT DATA (RS-485)
RT ON/OFF
RT TAKE CTRL
REMOTE VOLUME CONTROL
MOUNTING ADAPTER
RADIO RECEIVER-TRANSMITTER
835Z-1 HIGH PASS FILTER
VOICE/REC OUTPUT
MIC AUDIO
PTT
CIPHER MODE ENABLE
AIRCRAFT INTERPHONE
COCKPIT VOICE RECORDER
A79240

FIGURE 18