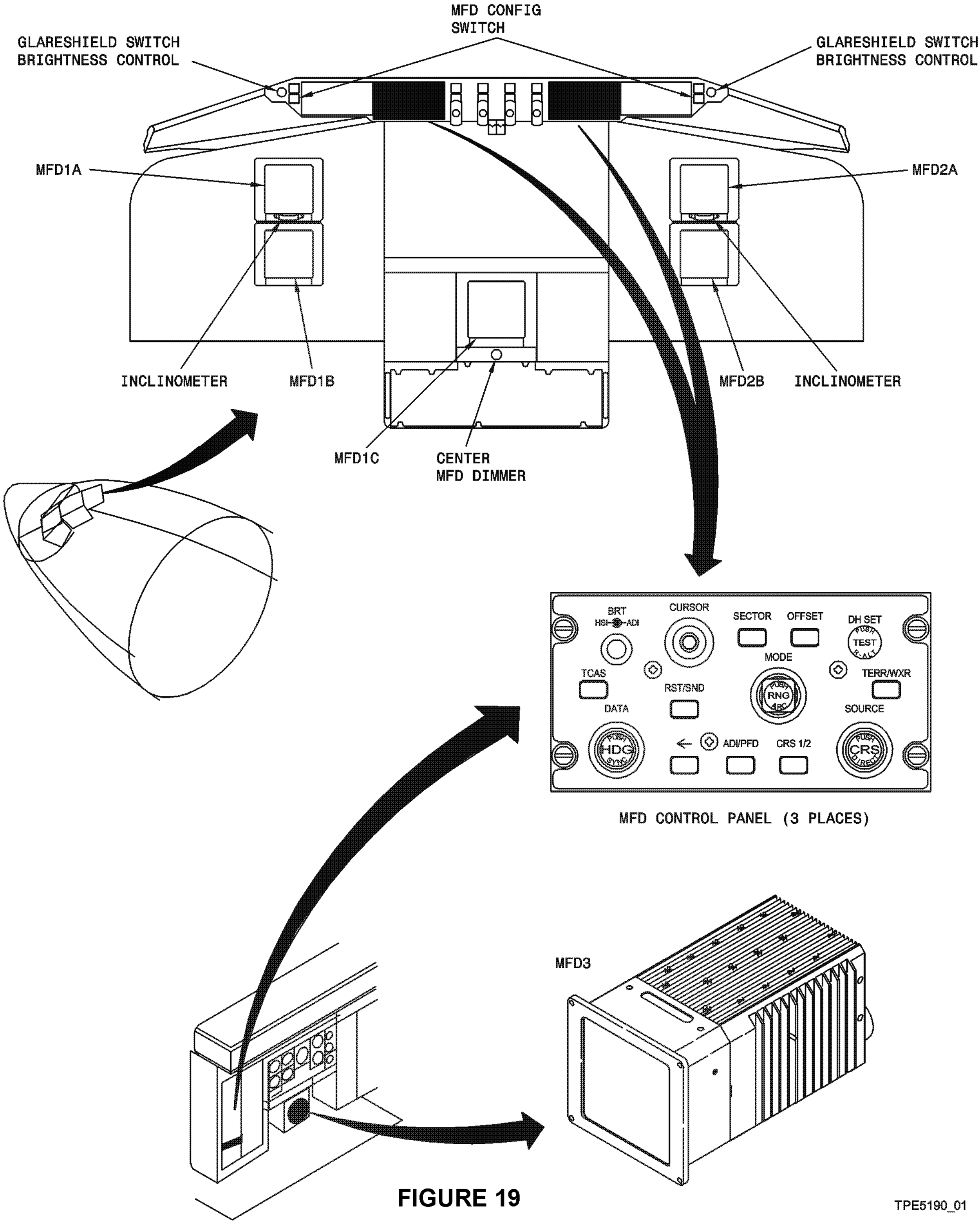

FIGURE 19

TPE5190_01