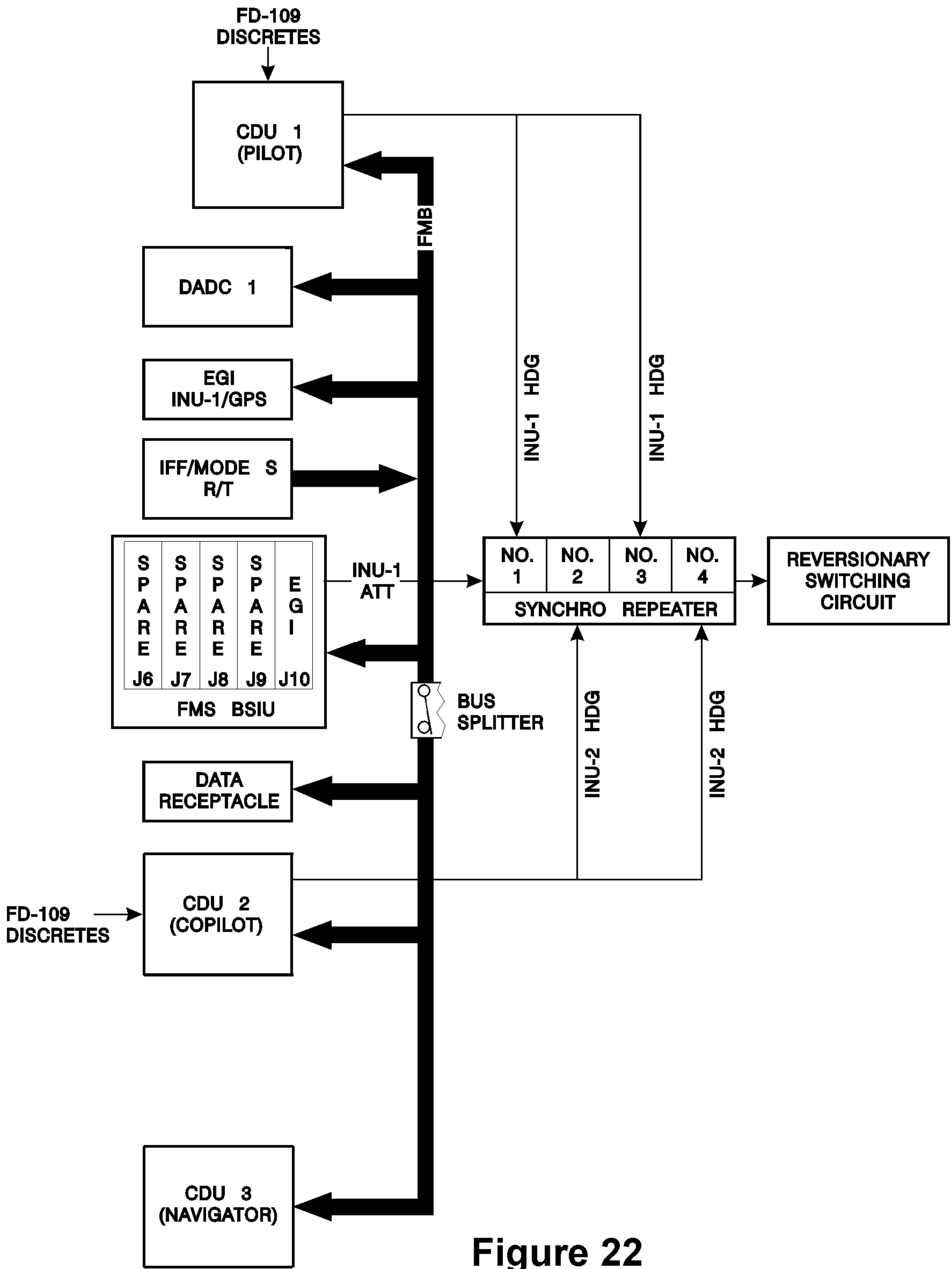

Figure 22

TPD-8634-011L