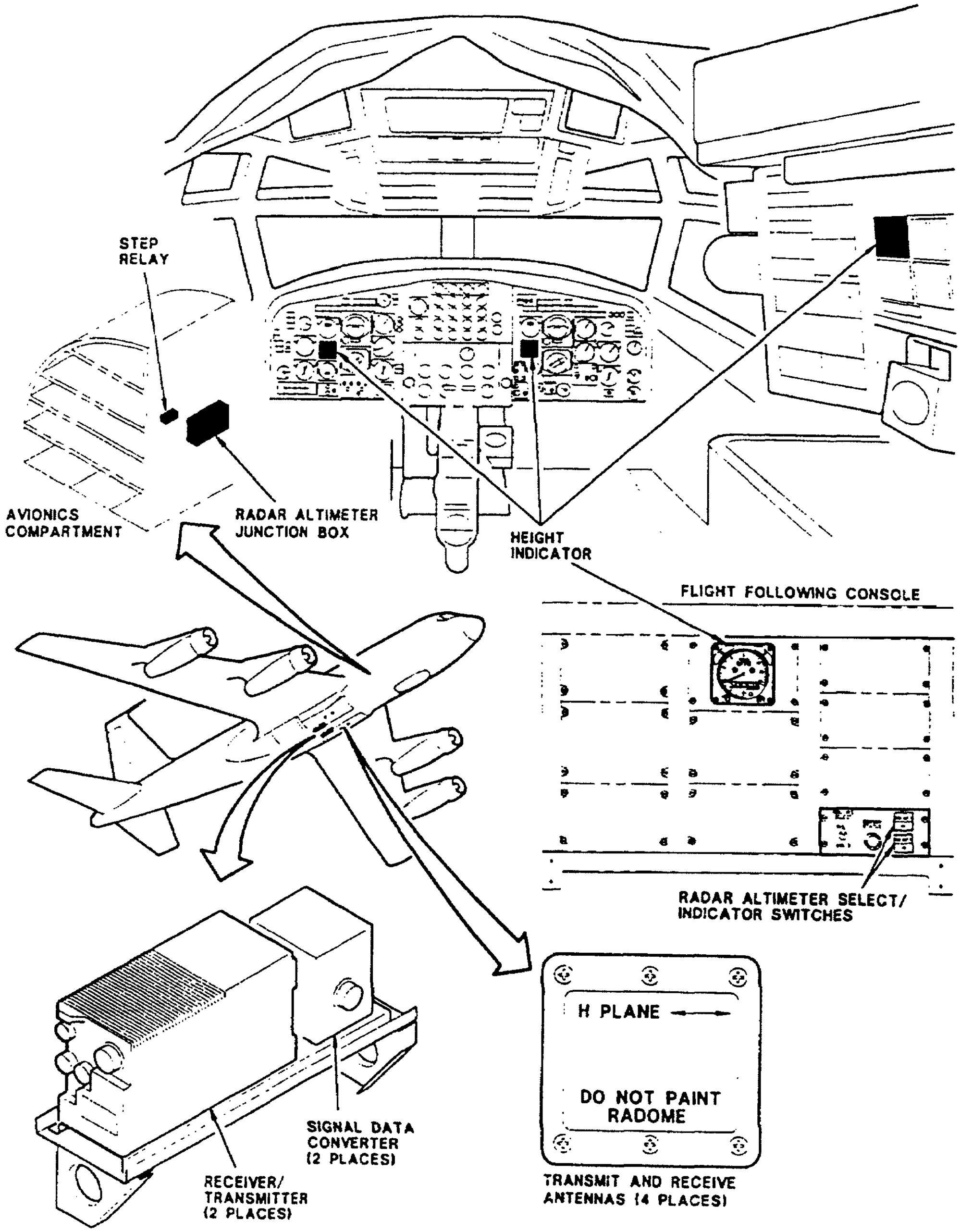

CARA Systems Equipment Location Diagram

FIGURE 44