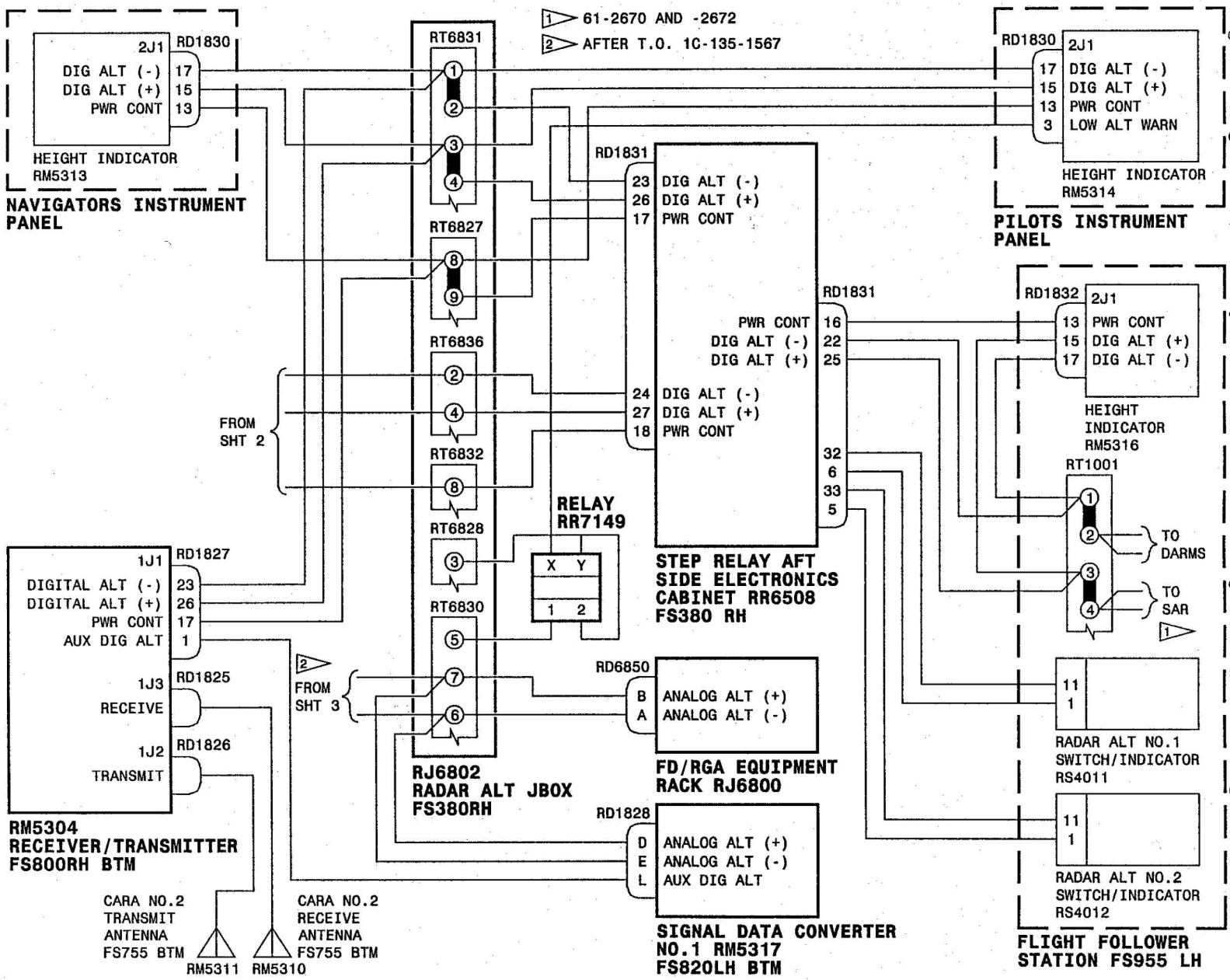

FIGURE 45 (SHEET 1 OF 3)

SYSTEM NO.1
OC-135B AIRCRAFT

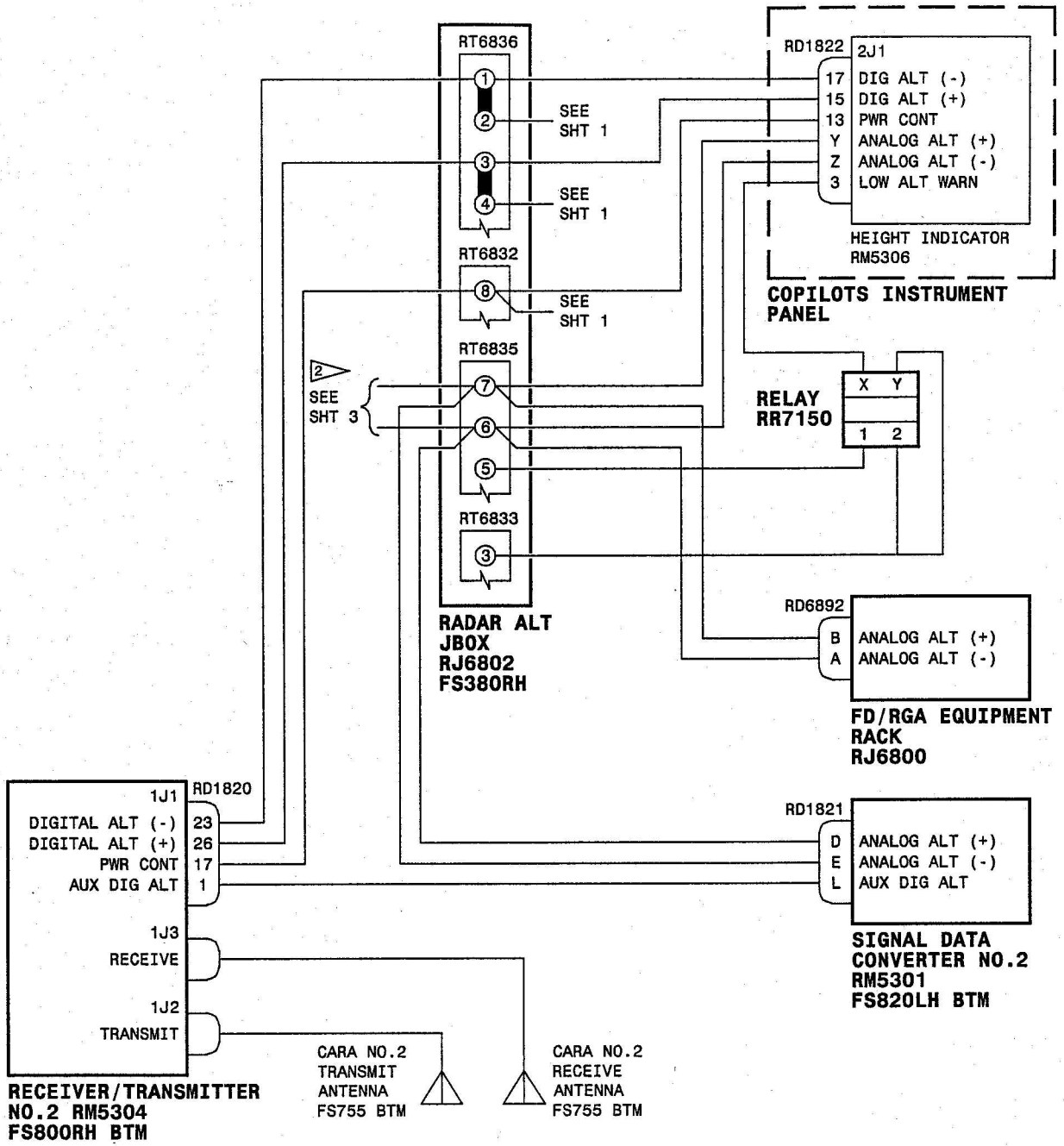

SYSTEM NO.2
OC-135B AIRCRAFT

FIGURE 45 (SHEET 2 OF 3)

TPF0961_01

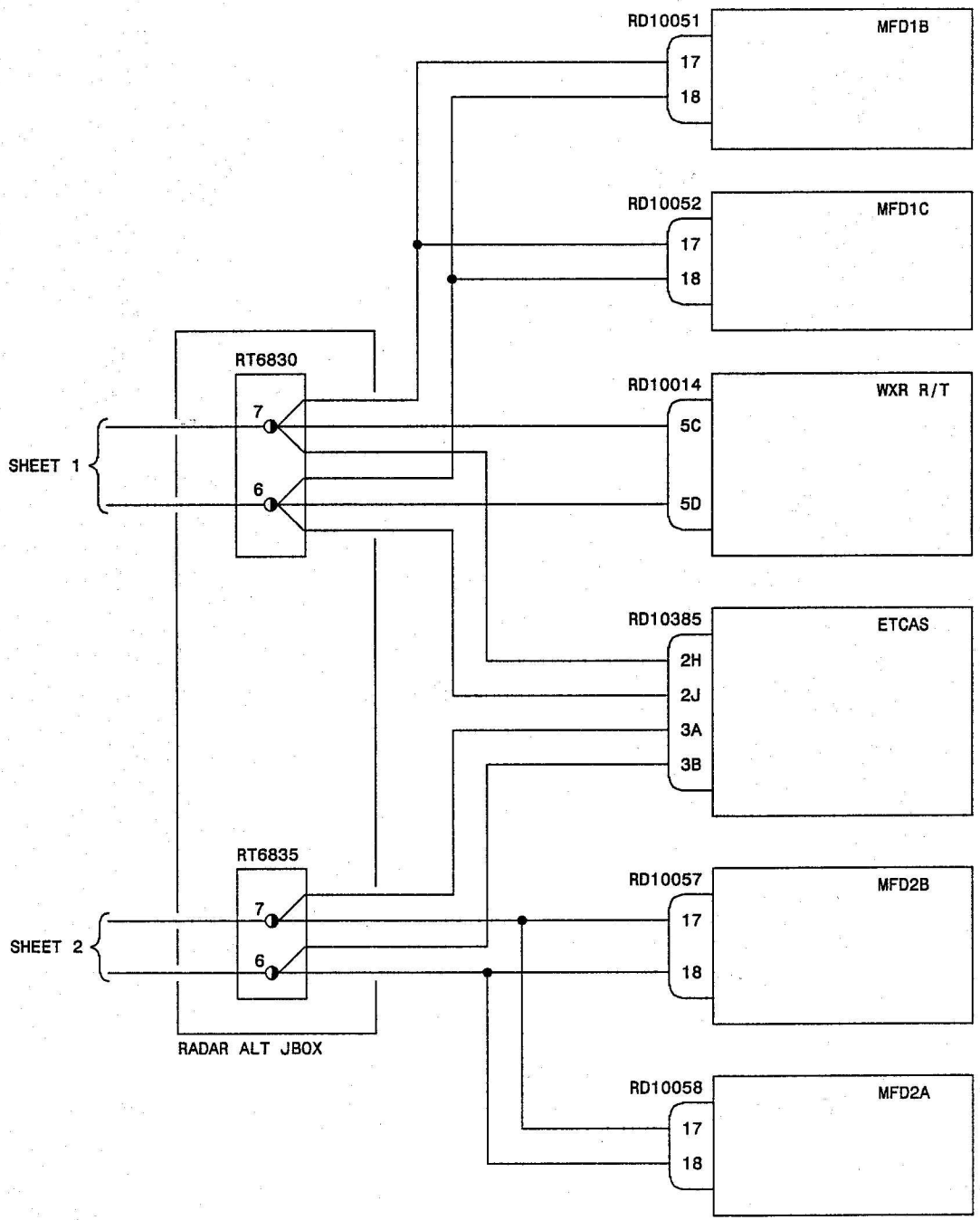

FIGURE 45 (SHEET 3 OF 3)

TPF0963_01