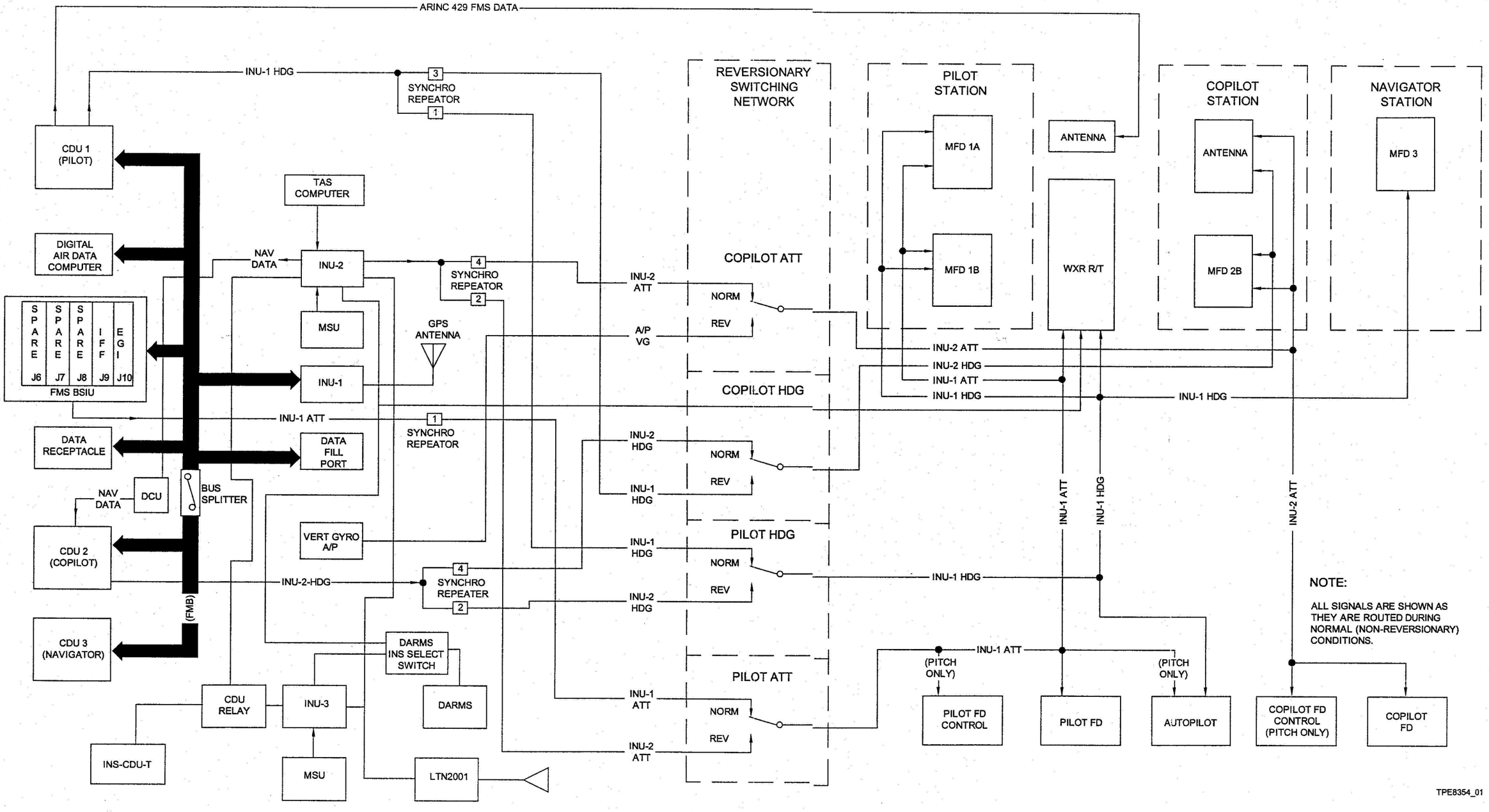
ARINC 429 FMS DATA
INU-1 HDG
SYNCHRO REPEATER
CDU 1 (PILOT)
TAS COMPUTER
DIGITAL AIR DATA COMPUTER
NAV DATA
INU-2
SYNCHRO REPEATER
SPARE J6
SPARE J7
SPARE J8
IFF J9
EGI J10
FMS BSIU
MSU
GPS ANTENNA
INU-1
INU-1 ATT
SYNCHRO REPEATER
DATA RECEPTACLE
DATA FILL PORT
NAV DATA
DCU
BUS SPLITTER
CDU 2 (COPILOT)
VERT GYRO A/P
INU-2-HDG
SYNCHRO REPEATER
(FMB)
CDU 3 (NAVIGATOR)
DARMS INS SELECT SWITCH
CDU RELAY
INU-3
DARMS
INS-CDU-T
MSU
LTN2001
REVERSIONARY SWITCHING NETWORK
INU-2 ATT
COPILOT ATT
NORM
REV
A/P VG
COPILOT HDG
INU-2 HDG
NORM
REV
INU-1 HDG
PILOT HDG
INU-1 HDG
NORM
REV
INU-2 HDG
PILOT ATT
INU-1 ATT
NORM
REV
INU-2 ATT
PILOT STATION
MFD 1A
MFD 1B
ANTENNA
WXR R/T
COPILOT STATION
ANTENNA
MFD 2B
NAVIGATOR STATION
MFD 3
INU-2 ATT
INU-2 HDG
INU-1 ATT
INU-1 HDG
INU-1 HDG
INU-1 ATT
INU-1 HDG
INU-2 ATT
INU-1 HDG
INU-1 ATT
(PITCH ONLY)
(PITCH ONLY)
PILOT FD CONTROL
PILOT FD
AUTOPILOT
COPILOT FD CONTROL (PITCH ONLY)
COPILOT FD
NOTE:
ALL SIGNALS ARE SHOWN AS THEY ARE ROUTED DURING NORMAL (NON-REVERSIONARY) CONDITIONS.
TPE8354_01

FIGURE 51