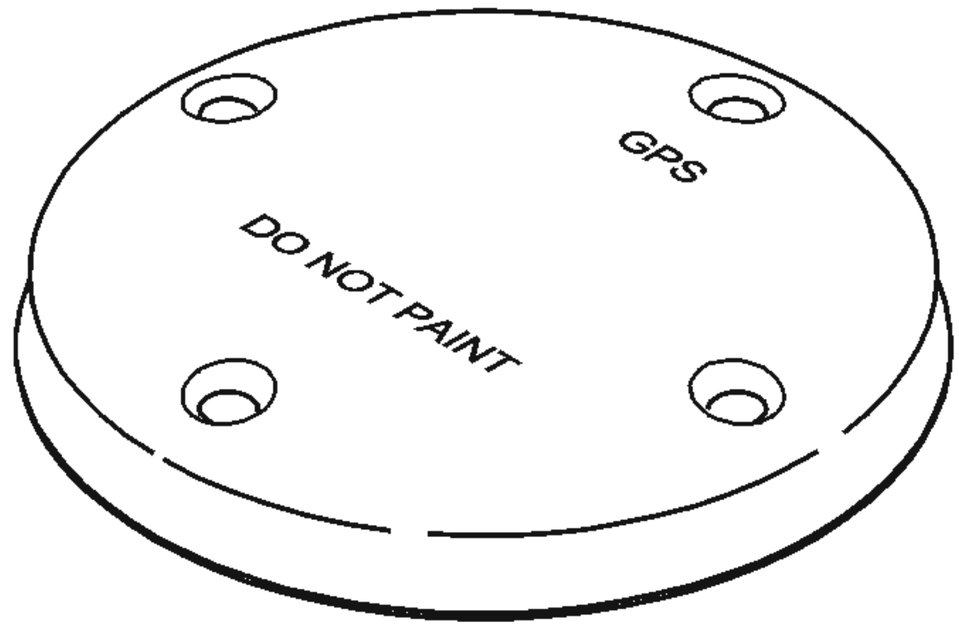

GPS ANTENNA

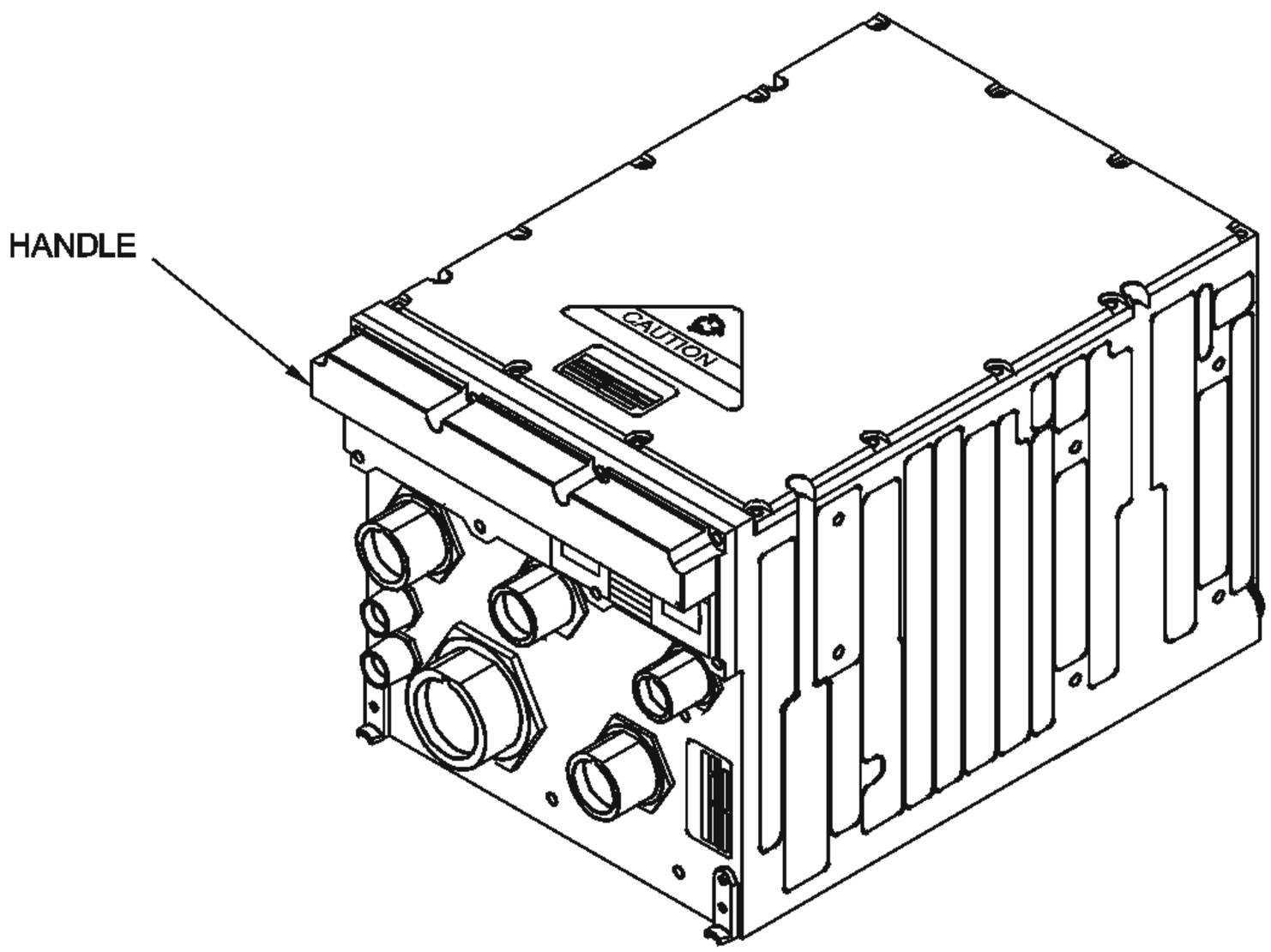

EGI (INU-1)

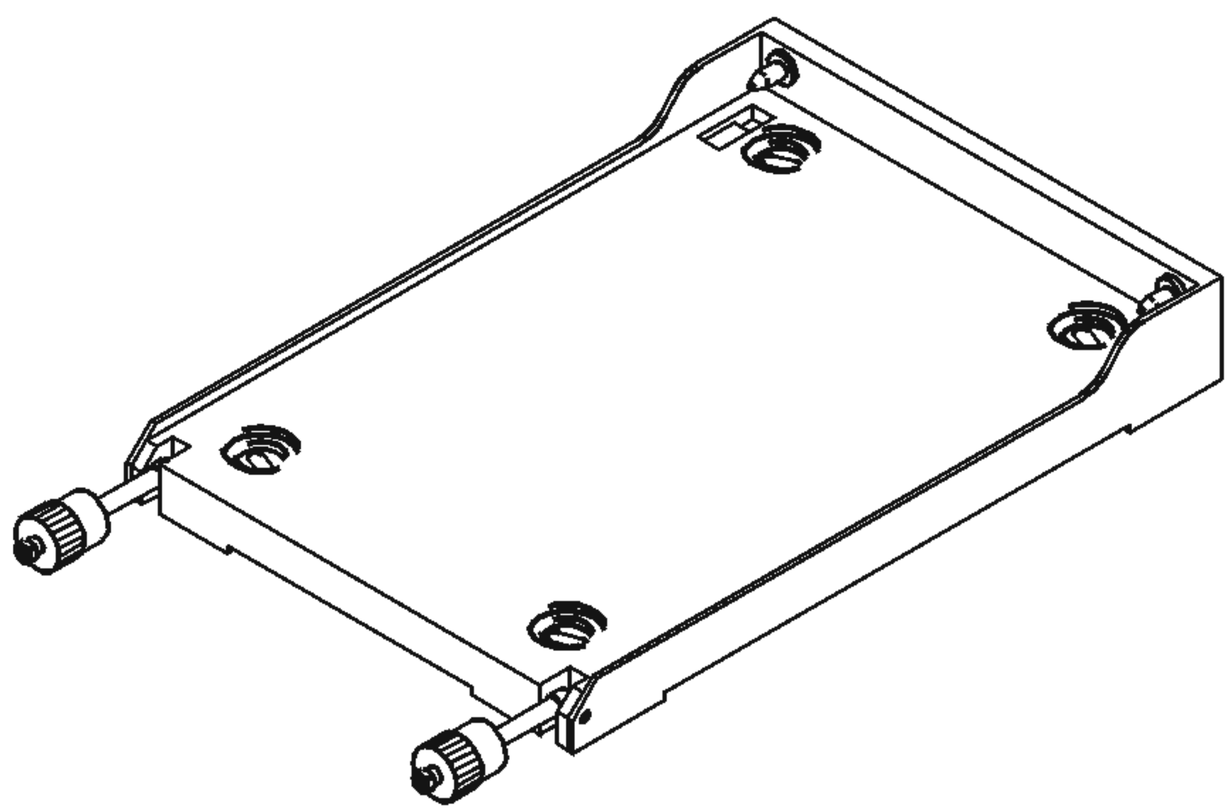

INS-1 EGI MOUNT

FIGURE 53

TPE9143_01