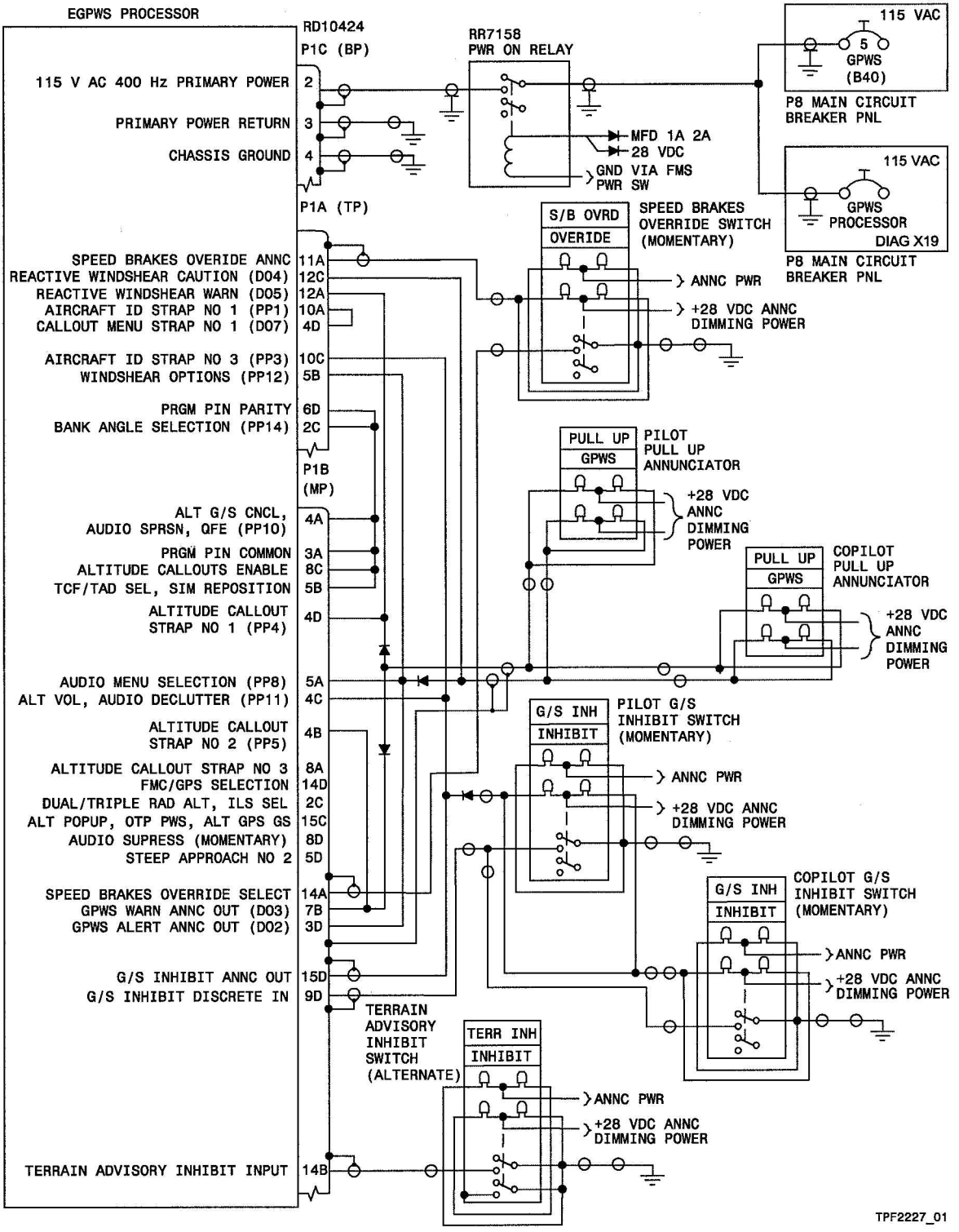
EGPWS PROCESSOR
RD10424
P1C (BP)
115 V AC 400 Hz PRIMARY POWER 2
PRIMARY POWER RETURN 3
CHASSIS GROUND 4
P1A (TP)
SPEED BRAKES OVERIDE ANNC 11A
REACTIVE WINDSHEAR CAUTION (D04) 12C
REACTIVE WINDSHEAR WARN (D05) 12A
AIRCRAFT ID STRAP NO 1 (PP1) 10A
CALLOUT MENU STRAP NO 1 (D07) 4D
AIRCRAFT ID STRAP NO 3 (PP3) 10C
WINDSHEAR OPTIONS (PP12) 5B
PRGM PIN PARITY 6D
BANK ANGLE SELECTION (PP14) 2C
P1B
(MP)
ALT G/S CNCL,
AUDIO SPRSN, QFE (PP10) 4A
PRGM PIN COMMON 3A
ALTITUDE CALLOUTS ENABLE 8C
TCF/TAD SEL, SIM REPOSITION 5B
ALTITUDE CALLOUT
STRAP NO 1 (PP4) 4D
AUDIO MENU SELECTION (PP8) 5A
ALT VOL, AUDIO DECLUTTER (PP11) 4C
ALTITUDE CALLOUT
STRAP NO 2 (PP5) 4B
ALTITUDE CALLOUT STRAP NO 3 8A
FMC/GPS SELECTION 14D
DUAL/TRIPLE RAD ALT, ILS SEL 2C
ALT POPUP, OTP PWS, ALT GPS GS 15C
AUDIO SUPRESS (MOMENTARY) 8D
STEEP APPROACH NO 2 5D
SPEED BRAKES OVERRIDE SELECT 14A
GPWS WARN ANNC OUT (D03) 7B
GPWS ALERT ANNC OUT (D02) 3D
G/S INHIBIT ANNC OUT 15D
G/S INHIBIT DISCRETE IN 9D
TERRAIN ADVISORY INHIBIT INPUT 14B
RR7158
PWR ON RELAY
MFD 1A 2A
28 VDC
GND VIA FMS
PWR SW
115 VAC
5
GPWS
(B40)
P8 MAIN CIRCUIT
BREAKER PNL
115 VAC
GPWS
PROCESSOR
DIAG X19
P8 MAIN CIRCUIT
BREAKER PNL
S/B OVRD
OVERIDE
SPEED BRAKES
OVERRIDE SWITCH
(MOMENTARY)
ANNC PWR
+28 VDC ANNC
DIMMING POWER
PULL UP
GPWS
PILOT
PULL UP
ANNUNCIATOR
+28 VDC
ANNC
DIMMING
POWER
PULL UP
GPWS
COPILOT
PULL UP
ANNUNCIATOR
+28 VDC
ANNC
DIMMING
POWER
G/S INH
INHIBIT
PILOT G/S
INHIBIT SWITCH
(MOMENTARY)
ANNC PWR
+28 VDC ANNC
DIMMING POWER
G/S INH
INHIBIT
COPILOT G/S
INHIBIT SWITCH
(MOMENTARY)
ANNC PWR
+28 VDC ANNC
DIMMING POWER
TERRAIN
ADVISORY
INHIBIT
SWITCH
(ALTERNATE)
TERR INH
INHIBIT
ANNC PWR
+28 VDC ANNC
DIMMING POWER
TPF2227_01

FIGURE 59