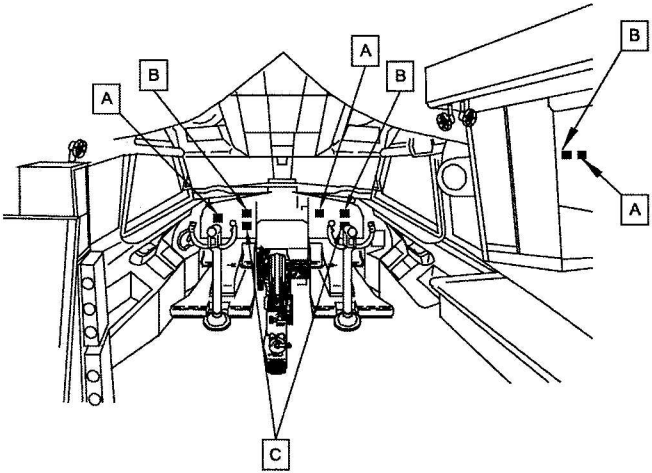


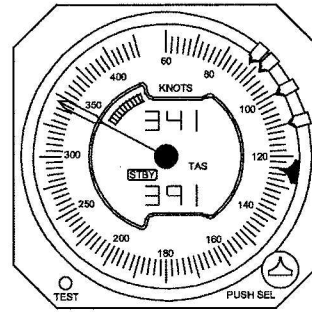


A AIRSPEED INDICATOR

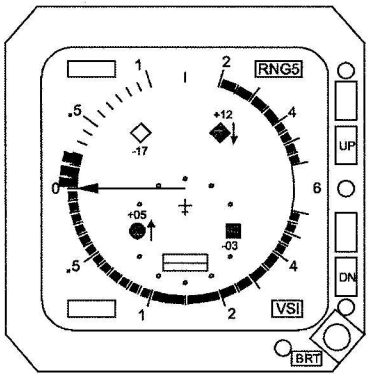


C TCAS/VERTICAL SPEED INDICATOR

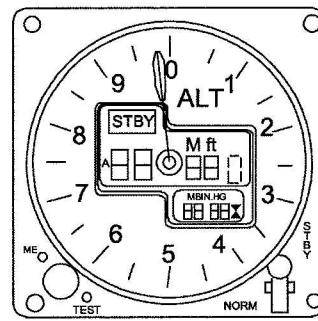


B ALTIMETER

FIGURE 62